TECHNICAL SPECIFICATIONS
KLIMBER P

TECHNICAL DATA

KLIMBER P			**20**	**22**	**24**
CELLS	NUMBER		66	66	66
	CLOSED		14	14	14
	BOX	m^2	31	31	31
FLAT	AREA	m^2	21	22,5	24,5
	SPAN	m	12,08	12,5	13,05
	ASPECT RATIO		6,95	6,95	6,95
PROJECTED	AREA	m^2	17,95	19,24	20,95
	SPAN	M	9,74	10,08	10,52
	ASPECT RATIO		5,28	5,28	5,28
FLATTENING		%	15	15	15
CORD	MAXIMUM	m	2,18	2,26	2,36
	MINIMUM	m	0,45	0,47	0,49
	AVERAGE	m	1,7	1,8	1,9
LINES	TOTAL METERS	m	227,1	235,4	246,1
	HEIGHT	m	7,3	7,56	7,9
	NUMBER		216	216	216
	MAIN		3+1/2/2/	3+1/2/2/	3+1/2/2/
RISERS	NUMBER	3	A+A'/B/C	A+A'/B/C	A+A'/B/C
	TRIMS		NO	NO	NO
	ACCELERATOR	m/m	150	150	150
TOTAL WEIGHT	MINIMUM	kg	65	70	85
IN FLIGHT	MAXIMUM	kg	85	90	110
GLIDER WEIGHT		kg	3,25	3,36	3,56
CERTIFICATION	EN/LTF		D	D	D

MATERIALS TECHNICAL DATA

CANOPY	FABRIC CODE	SUPPLIER
UPPER SURFACE FOR LEADING EDGE	70032 E3W	PORCHER IND (FRANCE)
UPPER SURFACE FOR THE REST	70000 E3H	PORCHER IND (FRANCE)
BOTTOM SURFACE	70000 E3H	PORCHER IND (FRANCE)
RIBS	70032 E4D/70000 E91	PORCHER IND (FRANCE)
DIAGONALS	70032 E4D/70000 E91	PORCHER IND (FRANCE)
LOOPS	LKI - 10	KOLON IND. (KOREA)
TRAILING EDGE REINFORCEMENT	MYLAR 20	D-P (GERMANY)
RIB REINFORCEMENT	LTN-0.8 STICK	SPORTWARE CO. (CHINA)
THREAD	SERAFIL 60	AMAN (GERMANY)

SUSPENSION LINES	FABRIC CODE	SUPPLIER
UPPER CASCADES	DC - 40	LIROS GMHB (GERMANY)
UPPER CASCADES	DC - 60	LIROS GMHB (GERMANY)
UPPER CASCADES	A-8000/U 50	EDELRID (GERMANY)
MIDDLE CASCADES	DC - 40	LIROS GMHB (GERMANY)
MIDDLE CASCADES	DC - 60	LIROS GMHB (GERMANY)
MIDDLE CASCADES	A-8000/U 70	EDELRID (GERMANY)
MIDDLE CASCADES	A-8000/U 90	EDELRID (GERMANY)
MIDDLE CASCADES	A-8000/U 130	EDELRID (GERMANY)
MAIN	A-8000/U 130	EDELRID (GERMANY)
MAIN	A-8000/U 190	EDELRID (GERMANY)
MAIN	A-8000/U 230	EDELRID (GERMANY)
MAIN BREAK	TNL-280	TEIJIM LIMITED (JAPAN)
THREAD	SERAFIL 60	AMAN (GERMANY)

RISERS	FABRIC CODE	SUPPLIER
MAIN MATERIAL	3455	COUSIN (FRANCE)
SECONDARY MATERIAL	10148	LIROS GMHB (GERMANY)
COLOUR INDICATOR	PAD	TECNI SANGLES (FRANCE)
THREAD	V138	COATS (UK)
PULLEYS	RF25109	RONSTAN (AUSTRALIA)

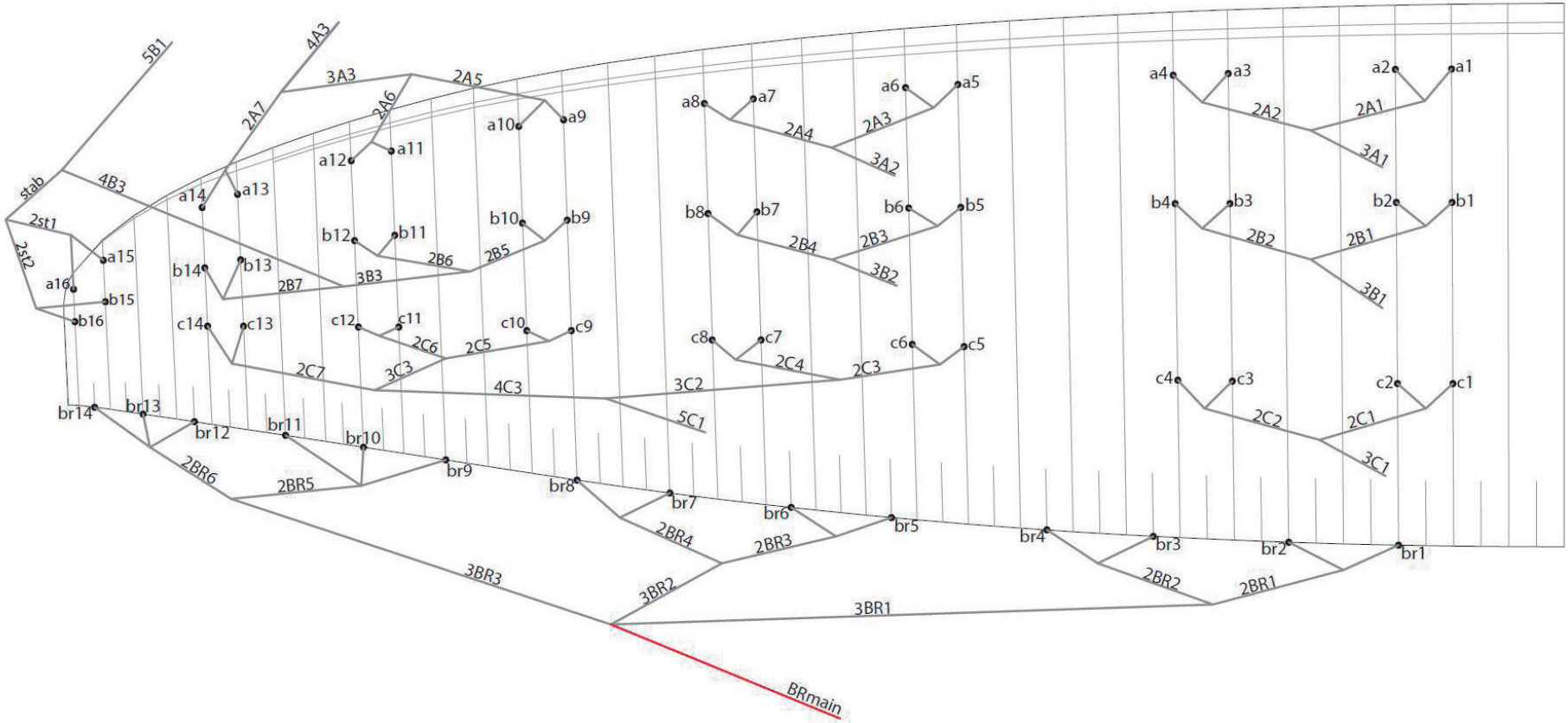
5B1
4A3
3A3
2A5
2A6
2A7
stab
4B3
2st1
2st2
a1
a2
a3
a4
a5
a6
a7
a8
a9
a10
a11
a12
a13
a14
a15
a16
b1
b2
b3
b4
b5
b6
b7
b8
b9
b10
b11
b12
b13
b14
b15
b16
c1
c2
c3
c4
c5
c6
c7
c8
c9
c10
c11
c12
c13
c14
2A1
2A2
3A1
2A3
2A4
3A2
2B1
2B2
3B1
2B3
2B4
3B2
2B5
2B6
3B3
2B7
2C1
2C2
3C1
2C3
2C4
3C2
5C1
2C5
2C6
3C3
4C3
2C7
br1
br2
br3
br4
br5
br6
br7
br8
br9
br10
br11
br12
br13
br14
2BR1
2BR2
3BR1
2BR3
2BR4
3BR2
2BR5
2BR6
3BR3
BRmain

A
3A1
3A2
3A3
A'
5B1
B
3B1
3B2
C
3C1
5C1

COLORS TECHNICAL DATA

SOUR	SB1	ORANGE	TOP	REF: 744
	SB2	ORANGE	BOTTOM	REF: 744
	SB3	LIMA	PLUME	REF: 300
	SB4	WHITE	SHADOW	REF: 001
	SB5	BLACK	MAIN SHADOW	REF: 102
	SB6	BLACK	VOLUME SHADOW	REF: 102

SPIDER	SB1	RED	TOP	REF: 633
	SB2	RED	BOTTOM	REF: 633
	SB3	ROYAL BLUE	PLUME	REF: 317
	SB4	WHITE	SHADOW	REF: 001
	SB5	BLACK	MAIN SHADOW	REF: 102
	SB6	BLACK	VOLUME SHADOW	REF: 102

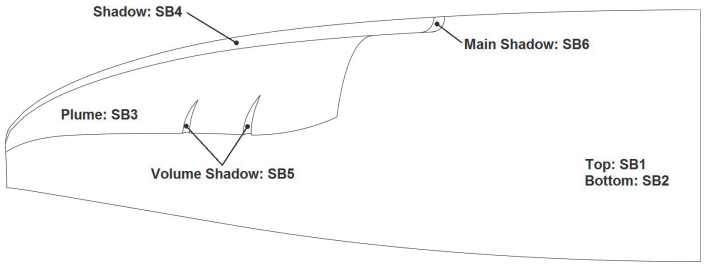

KLIMBER P

20			**22**			**24**		
P.T.V.		kg/m²	P.T.V.		kg/m²	P.T.V.		kg/m²
65	=	3,10	70	=	3,11	85	=	3,70
66	=	3,14	71	=	3,16	86	=	3,74
67	=	3,19	72	=	3,20	87	=	3,78
68	=	3,24	73	=	3,24	88	=	3,83
69	=	3,29	74	=	3,29	89	=	3,87
70	=	3,33	75	=	3,33	90	=	3,91
71	=	3,38	76	=	3,38	91	=	3,96
72	=	3,43	77	=	3,42	92	=	4,00
73	=	3,48	78	=	3,47	93	=	4,04
74	=	3,52	79	=	3,51	94	=	4,09
75	=	3,57	80	=	3,56	95	=	4,13
76	=	3,62	81	=	3,60	96	=	4,17
77	=	3,67	82	=	3,64	97	=	4,22
78	=	3,71	83	=	3,69	98	=	4,26
79	=	3,76	84	=	3,73	99	=	4,30
80	=	3,81	85	=	3,78	100	=	4,35
81	=	3,86	86	=	3,82	102	=	4,43
82	=	3,90	87	=	3,87	104	=	4,52
83	=	3,95	88	=	3,91	106	=	4,61
84	=	4,00	89	=	3,96	108	=	4,70
85	=	4,05	90	=	4,00	110	=	4,78

KLIMBER P					20														
REF.	MAT.	kg	COLOR	m/m	REF.	MAT.	kg	COLOR	m/m	REF.	MAT.	kg	COLOR	m/m	REF.	MAT.	kg	COLOR	m/m
A					B					C					BRAKE				
a1	DC	60	WHT	306	b1	DC	60	WHT	302	c1	DC	40	WHT	307	br1	A-8000/U	50	NATURAL	684
a2	DC	60	WHT	263	b2	DC	60	WHT	262	c2	DC	40	WHT	249	br2	A-8000/U	50	NATURAL	415
a3	DC	60	WHT	277	b3	DC	60	WHT	272	c3	DC	40	WHT	262	br3	A-8000/U	50	NATURAL	621
a4	DC	60	WHT	290	b4	DC	60	WHT	288	c4	DC	40	WHT	296	br4	A-8000/U	50	NATURAL	634
a5	DC	60	WHT	285	b5	DC	60	WHT	280	c5	DC	40	WHT	289	br5	A-8000/U	50	NATURAL	628
a6	DC	60	WHT	243	b6	DC	60	WHT	243	c6	DC	40	WHT	212	br6	A-8000/U	50	NATURAL	517
a7	DC	60	WHT	245	b7	DC	40	WHT	240	c7	DC	40	WHT	246	br7	A-8000/U	50	NATURAL	528
a8	DC	60	WHT	259	b8	DC	40	WHT	258	c8	DC	40	WHT	258	br8	A-8000/U	50	NATURAL	567
a9	DC	40	WHT	278	b9	DC	40	WHT	274	c9	DC	40	WHT	250	br9	A-8000/U	50	NATURAL	987
a10	DC	40	WHT	212	b10	DC	40	WHT	208	c10	DC	40	WHT	196	br10	A-8000/U	50	NATURAL	894
a11	DC	40	WHT	259	b11	DC	40	WHT	254	c11	DC	40	WHT	189	br11	A-8000/U	50	NATURAL	895
a12	DC	40	WHT	253	b12	DC	40	WHT	247	c12	DC	40	WHT	221	br12	A-8000/U	50	NATURAL	497
a13	DC	40	WHT	251	b13	DC	40	WHT	242	c13	DC	40	WHT	231	br13	A-8000/U	50	NATURAL	533
a14	DC	40	WHT	245	b14	DC	40	WHT	234	c14	DC	40	WHT	240	br14	A-8000/U	50	NATURAL	621
a15	DC	40	WHT	578	b15	DC	40	WHT	571										
a16	DC	40	WHT	560	b16	DC	40	WHT	564										
2A1	A-8000/U	130	NATURAL	1.738	2B1	A-8000/U	130	NATURAL	1.718	2C1	A-8000/U	130	NATURAL	1.221	2BR1	A-8000/U	50	NATURAL	1.101
2A2	A-8000/U	130	NATURAL	1.680	2B2	A-8000/U	130	NATURAL	1.670	2C2	A-8000/U	130	NATURAL	1.170	2BR2	A-8000/U	50	NATURAL	735
2A3	A-8000/U	130	NATURAL	1.560	2B3	A-8000/U	130	NATURAL	1.538	2C3	A-8000/U	130	NATURAL	1.132	2BR3	A-8000/U	50	NATURAL	982
2A4	A-8000/U	90	NATURAL	1.491	2B4	A-8000/U	90	NATURAL	1.487	2C4	A-8000/U	90	NATURAL	979	2BR4	A-8000/U	50	NATURAL	918
2A5	A-8000/U	70	NATURAL	1.300	2B5	A-8000/U	70	NATURAL	1.279	2C5	A-8000/U	70	NATURAL	911	2BR5	A-8000/U	50	NATURAL	492
2A6	A-8000/U	70	NATURAL	1.138	2B6	A-8000/U	70	NATURAL	1.117	2C6	A-8000/U	70	NATURAL	877	2BR6	A-8000/U	50	NATURAL	904
2A7	A-8000/U	70	NATURAL	2.032	2B7	A-8000/U	70	NATURAL	1.981	2C7	A-8000/U	70	NATURAL	1.960					
3A3	A-8000/U	130	NATURAL	981	3B3	A-8000/U	90	NATURAL	948	3C2	A-8000/U	130	NATURAL	2.163					
					4B3	A-8000/U	90	NATURAL	1.715	3C3	A-8000/U	90	NATURAL	1.134	3BR1	A-8000/U	90	NATURAL	3.150
					stab	A-8000/U	70	NATURAL	2.631	4C3	A-8000/U	90	NATURAL	1.009	3BR2	A-8000/U	90	NATURAL	2.771
					2st1	DC	60	WHT	569						3BR3	A-8000/U	90	NATURAL	2.682
					2st2	DC	60	WHT	566										
3A1	A-8000/U	230	NATURAL	4.763	3B1	A-8000/U	190	NATURAL	4.695	3C1	A-8000/U	190	NATURAL	5.275	BRMain	TNL	280	RED	2.744
3A2	A-8000/U	190	NATURAL	4.805	3B2	A-8000/U	130	NATURAL	4.766	5C1	A-8000/U	190	NATURAL	3.169		Point a :			2.544
4A3	A-8000/U	130	NATURAL	3.904	5B1	A-8000/U	130	NATURAL	2.212										

KLIMBER P					22														
REF.	MAT.	kg	COLOR	m/m	REF.	MAT.	kg	COLOR	m/m	REF.	MAT.	kg	COLOR	m/m	REF.	MAT.	kg	COLOR	m/m
A					B					C					BRAKE				
a1	DC	60	WHT	316	b1	DC	60	WHT	313	c1	DC	40	WHT	318	br1	A-8000/U	50	NATURAL	708
a2	DC	60	WHT	273	b2	DC	60	WHT	272	c2	DC	40	WHT	258	br2	A-8000/U	50	NATURAL	430
a3	DC	60	WHT	286	b3	DC	60	WHT	282	c3	DC	40	WHT	270	br3	A-8000/U	50	NATURAL	642
a4	DC	60	WHT	300	b4	DC	60	WHT	299	c4	DC	40	WHT	306	br4	A-8000/U	50	NATURAL	657
a5	DC	60	WHT	295	b5	DC	60	WHT	290	c5	DC	40	WHT	299	br5	A-8000/U	50	NATURAL	649
a6	DC	60	WHT	252	b6	DC	60	WHT	252	c6	DC	40	WHT	220	br6	A-8000/U	50	NATURAL	536
a7	DC	60	WHT	254	b7	DC	40	WHT	249	c7	DC	40	WHT	254	br7	A-8000/U	50	NATURAL	546
a8	DC	60	WHT	268	b8	DC	40	WHT	267	c8	DC	40	WHT	267	br8	A-8000/U	50	NATURAL	587
a9	DC	40	WHT	287	b9	DC	40	WHT	284	c9	DC	40	WHT	259	br9	A-8000/U	50	NATURAL	1.021
a10	DC	40	WHT	219	b10	DC	40	WHT	216	c10	DC	40	WHT	203	br10	A-8000/U	50	NATURAL	925
a11	DC	40	WHT	268	b11	DC	40	WHT	263	c11	DC	40	WHT	196	br11	A-8000/U	50	NATURAL	927
a12	DC	40	WHT	262	b12	DC	40	WHT	256	c12	DC	40	WHT	229	br12	A-8000/U	50	NATURAL	514
a13	DC	40	WHT	260	b13	DC	40	WHT	251	c13	DC	40	WHT	239	br13	A-8000/U	50	NATURAL	552
a14	DC	40	WHT	254	b14	DC	40	WHT	242	c14	DC	40	WHT	248	br14	A-8000/U	50	NATURAL	643
a15	DC	40	WHT	598	b15	DC	40	WHT	591										
a16	DC	40	WHT	580	b16	DC	40	WHT	584										
2A1	A-8000/U	130	NATURAL	1.799	2B1	A-8000/U	130	NATURAL	1.778	2C1	A-8000/U	130	NATURAL	1.263	2BR1	A-8000/U	50	NATURAL	1.139
2A2	A-8000/U	130	NATURAL	1.740	2B2	A-8000/U	130	NATURAL	1.730	2C2	A-8000/U	130	NATURAL	1.212	2BR2	A-8000/U	50	NATURAL	752
2A3	A-8000/U	130	NATURAL	1.615	2B3	A-8000/U	130	NATURAL	1.592	2C3	A-8000/U	130	NATURAL	1.171	2BR3	A-8000/U	50	NATURAL	1.016
2A4	A-8000/U	90	NATURAL	1.544	2B4	A-8000/U	90	NATURAL	1.540	2C4	A-8000/U	90	NATURAL	1.014	2BR4	A-8000/U	50	NATURAL	951
2A5	A-8000/U	70	NATURAL	1.346	2B5	A-8000/U	70	NATURAL	1.323	2C5	A-8000/U	70	NATURAL	943	2BR5	A-8000/U	50	NATURAL	509
2A6	A-8000/U	70	NATURAL	1.178	2B6	A-8000/U	70	NATURAL	1.156	2C6	A-8000/U	70	NATURAL	908	2BR6	A-8000/U	50	NATURAL	927
2A7	A-8000/U	70	NATURAL	2.104	2B7	A-8000/U	70	NATURAL	2.051	2C7	A-8000/U	70	NATURAL	2.029					
3A3	A-8000/U	130	NATURAL	1.015	3B3	A-8000/U	90	NATURAL	981	3C2	A-8000/U	130	NATURAL	2.248					
					4B3	A-8000/U	90	NATURAL	1.775	3C3	A-8000/U	90	NATURAL	1.174	3BR1	A-8000/U	90	NATURAL	3.268
					stab	A-8000/U	70	NATURAL	2.724	4C3	A-8000/U	90	NATURAL	1.055	3BR2	A-8000/U	90	NATURAL	2.869
					2st1	DC	60	WHT	589						3BR3	A-8000/U	90	NATURAL	2.757
					2st2	DC	60	WHT	586										
3A1	A-8000/U	230	NATURAL	4.940	3B1	A-8000/U	190	NATURAL	4.878	3C1	A-8000/U	190	NATURAL	5.479	BRMain	TNL	280	RED	2.863
3A2	A-8000/U	190	NATURAL	4.987	3B2	A-8000/U	130	NATURAL	4.954	5C1	A-8000/U	190	NATURAL	3.292		Point a :			2.663
4A3	A-8000/U	130	NATURAL	4.063	5B1	A-8000/U	130	NATURAL	2.312										

KLIMBER P					24														
REF.	MAT.	kg	COLOR	m/m	REF.	MAT.	kg	COLOR	m/m	REF.	MAT.	kg	COLOR	m/m	REF.	MAT.	kg	COLOR	m/m
A					B					C					BRAKE				
a1	DC	60	WHT	330	b1	DC	60	WHT	326	c1	DC	40	WHT	332	br1	A-8000/U	50	NATURAL	739
a2	DC	60	WHT	285	b2	DC	60	WHT	284	c2	DC	40	WHT	270	br2	A-8000/U	50	NATURAL	449
a3	DC	60	WHT	298	b3	DC	60	WHT	294	c3	DC	40	WHT	282	br3	A-8000/U	50	NATURAL	670
a4	DC	60	WHT	313	b4	DC	60	WHT	312	c4	DC	40	WHT	320	br4	A-8000/U	50	NATURAL	685
a5	DC	60	WHT	307	b5	DC	60	WHT	303	c5	DC	40	WHT	312	br5	A-8000/U	50	NATURAL	678
a6	DC	60	WHT	263	b6	DC	60	WHT	263	c6	DC	40	WHT	230	br6	A-8000/U	50	NATURAL	559
a7	DC	60	WHT	265	b7	DC	40	WHT	259	c7	DC	40	WHT	265	br7	A-8000/U	50	NATURAL	569
a8	DC	60	WHT	280	b8	DC	40	WHT	279	c8	DC	40	WHT	279	br8	A-8000/U	50	NATURAL	613
a9	DC	40	WHT	300	b9	DC	40	WHT	296	c9	DC	40	WHT	270	br9	A-8000/U	50	NATURAL	1.065
a10	DC	40	WHT	229	b10	DC	40	WHT	225	c10	DC	40	WHT	212	br10	A-8000/U	50	NATURAL	966
a11	DC	40	WHT	280	b11	DC	40	WHT	274	c11	DC	40	WHT	204	br11	A-8000/U	50	NATURAL	967
a12	DC	40	WHT	274	b12	DC	40	WHT	267	c12	DC	40	WHT	239	br12	A-8000/U	50	NATURAL	536
a13	DC	40	WHT	271	b13	DC	40	WHT	261	c13	DC	40	WHT	250	br13	A-8000/U	50	NATURAL	575
a14	DC	40	WHT	265	b14	DC	40	WHT	253	c14	DC	40	WHT	259	br14	A-8000/U	50	NATURAL	671
a15	DC	40	WHT	624	b15	DC	40	WHT	617										
a16	DC	40	WHT	605	b16	DC	40	WHT	610										
2A1	A-8000/U	130	NATURAL	1.876	2B1	A-8000/U	130	NATURAL	1.855	2C1	A-8000/U	130	NATURAL	1.317	2BR1	A-8000/U	50	NATURAL	1.188
2A2	A-8000/U	130	NATURAL	1.817	2B2	A-8000/U	130	NATURAL	1.806	2C2	A-8000/U	130	NATURAL	1.266	2BR2	A-8000/U	50	NATURAL	786
2A3	A-8000/U	130	NATURAL	1.685	2B3	A-8000/U	130	NATURAL	1.661	2C3	A-8000/U	130	NATURAL	1.222	2BR3	A-8000/U	50	NATURAL	1.059
2A4	A-8000/U	90	NATURAL	1.612	2B4	A-8000/U	90	NATURAL	1.608	2C4	A-8000/U	90	NATURAL	1.059	2BR4	A-8000/U	50	NATURAL	994
2A5	A-8000/U	70	NATURAL	1.404	2B5	A-8000/U	70	NATURAL	1.381	2C5	A-8000/U	70	NATURAL	984	2BR5	A-8000/U	50	NATURAL	530
2A6	A-8000/U	70	NATURAL	1.229	2B6	A-8000/U	70	NATURAL	1.207	2C6	A-8000/U	70	NATURAL	947	2BR6	A-8000/U	50	NATURAL	968
2A7	A-8000/U	70	NATURAL	2.196	2B7	A-8000/U	70	NATURAL	2.141	2C7	A-8000/U	70	NATURAL	2.117					
3A3	A-8000/U	130	NATURAL	1.059	3B3	A-8000/U	90	NATURAL	1.024	3C2	A-8000/U	130	NATURAL	2.358					
					4B3	A-8000/U	90	NATURAL	1.852	3C3	A-8000/U	90	NATURAL	1.225	3BR1	A-8000/U	90	NATURAL	3.408
					stab	A-8000/U	70	NATURAL	2.844	4C3	A-8000/U	90	NATURAL	1.115	3BR2	A-8000/U	90	NATURAL	2.994
					2st1	DC	60	WHT	615						3BR3	A-8000/U	90	NATURAL	2.881
					2st2	DC	60	WHT	612										
3A1	A-8000/U	230	NATURAL	5.178	3B1	A-8000/U	190	NATURAL	5.113	3C1	A-8000/U	190	NATURAL	5.739	BRMain	TNL	280	RED	3.001
3A2	A-8000/U	190	NATURAL	5.230	3B2	A-8000/U	130	NATURAL	5.195	5C1	A-8000/U	190	NATURAL	3.448		Point a :			2.801
4A3	A-8000/U	130	NATURAL	4.267	5B1	A-8000/U	130	NATURAL	2.440										

NIVIUK KLIMBER P 20

LINES HEIGHT m/m

	A	B	C	br
1	6802	6710	6798	7469
2	6759	6670	6740	7200
3	6715	6632	6702	7040
4	6728	6648	6736	7053
5	6645	6579	6748	6915
6	6603	6542	6671	6804
7	6536	6488	6552	6751
8	6550	6506	6564	6790
9	6458	6423	6468	6695
10	6392	6357	6414	6602
11	6277	6241	6373	6603
12	6271	6234	6405	6617
13	6176	6137	6364	6653
14	6176	6137	6373	6741
15	5980	5973		
16	5962	5963		

RISERS LENGHT m/m

A	A'	B	C	
470	470	470	470	STANDARD
312	370	390	470	ACCELERATED
158	100	80	0	TRAVEL

NIVIUK KLIMBER P 22

LINES HEIGHT m/m

	A	B	C	br
1	7050	6964	7055	7773
2	7007	6923	6995	7495
3	6961	6885	6956	7320
4	6975	6902	6992	7335
5	6892	6831	7005	7192
6	6849	6793	6926	7079
7	6780	6738	6803	7024
8	6794	6756	6816	7065
9	6706	6670	6718	6945
10	6638	6602	6662	6849
11	6519	6482	6620	6851
12	6513	6475	6653	6856
13	6416	6375	6610	6894
14	6416	6375	6619	6985
15	6213	6206		
16	6195	6196		

RISERS LENGHT m/m

A	A'	B	C	
470	470	470	470	STANDARD
312	370	390	470	ACCELERATED
158	100	80	0	TRAVEL

NIVIUK KLIMBER P 24

LINES HEIGHT m/m

	A	B	C	br
1	7379	7289	7383	8126
2	7334	7247	7321	7836
3	7288	7208	7282	7655
4	7303	7226	7320	7670
5	7217	7154	7335	7522
6	7173	7114	7253	7403
7	7102	7057	7125	7348
8	7117	7077	7139	7392
9	7025	6988	7037	7267
10	6954	6917	6979	7168
11	6830	6792	6934	7169
12	6824	6785	6969	7176
13	6723	6681	6925	7215
14	6723	6681	6934	7311
15	6513	6506		
16	6494	6496		

RISERS LENGHT m/m

A	A'	B	C	
470	470	470	470	STANDARD
312	370	390	470	ACCELERATED
158	100	83	0	TRAVEL

KLIMBER P

MATERIAL CODE		DC	DC	TNL	8000/U	A-8000/U	A-8000/U	A-8000/U	A-8000/U	A-8000/U
STRENGTH CODE		40	060	280	50	070	090	130	190	230
DIAMETER m/m	Ø	0,5	0,6	1,8	0,5	0,7	0,8	0,9	1,1	1,1 X 1,4
CORE MATERIAL		DYNEEMA	DYNEEMA	TECHNORA	ARAMID	ARAMID	ARAMID	ARAMID	ARAMID	ARAMID
SLEEVE MATERIAL		NO	NO	POLYESTER	NO	NO	NO	NO	NO	NO
WEIGHT G/M	TOTAL	0,19	0,24	2,7	0,3	0,4	0,5	0,8	1,1	1,4
BREAKING STRENGTH	MINIMUM	40	60	280	50	70	90	130	190	230
	MAXIMUM	48	84	320	59	78	110	144	211	255
STRENGTH AFTER										
5.000 BENDING	TEST EN	33	74	134,7	26	39	49	88	52	69
CYCLES										
ELONGATION AT	5 daN en %			0,2	0,4	0,5	0,4	0,4	0,4	0,3
	10 daN en %		0,43	0,3	0,7	0,7	0,6	0,6	0,6	0,5
	15 daN en %			0,4	1,1	1	0,8	0,8	0,7	0,6
	20 daN en %			0,4	1,5	1,3	1	0,9	0,9	0,7
	25 daN en %			0,5	1,9	1,5	1,3	1	1	0,8
	30 daN en %		1,2	0,9	3,3	2,8	2,3	1,8	1,6	1,3
	75 daN en %			1,3		3,7	3,2	3,1	2,7	2,3
	100 daN en %			1,7					2,6	3,6
	125 daN en %			2					3,5	3,3
	150 daN en %			2,3					4,3	3,6
	175 daN en %			2,7						
	200 daN en %			2,8						
	250 daN en %									
ELONGATION MAX. BREAKING STRENGTH %			3,2	4,1	3,8	3,9	4,3	4	4,4	4,4

PULLEY TECHNICAL DATA

DESCRIPTION

	PULLEY	20 m/m
	CODE	RF25109
	MATERIAL	STAINLESS STEEL
		NYLON
		CARBON ACETAL
	BEARING	DELRIN®
	WEIGHT	9 G/PIECE

TECHNICAL SPECIFICATIONS

	DIMENSIONS	m/m
	L.T.	20
	L.I.	20
	H.T.	32
	Ø	6 MAX
	LOAD	kg
	WORKING LIMIT	250
	BREAKING	550

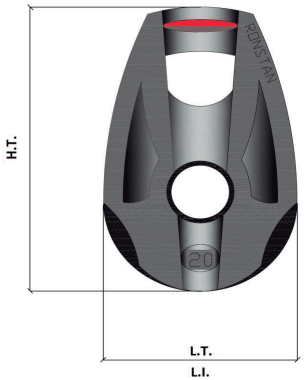

THREAD TECHNICAL DATA

SAIL MAKING	
NAME	SERAFIL
Nº OF REFERENCE	60
MATERIAL	POLYESTER
TYPE OF FINISH	SILK
LINEAR DENSITY	NM 61 / 3 (DTEX 163 * 3)
BREAKING STRENGTH	3,000 CN
ELONGATION	17,00%
SERAFIL PROPERTIES	
SOLIDITY ARTIFICIAL LIGTH	ISO 105 B02 > 5 - 6
SOLIDITY SWEAT	ISO 105 E04 > 4
SOLIDITY WASHING	ISO 105 C04 > 3
SOLIDITY GRAZE IN DRY	ISO 105 X12 > 4
SOLIDITY WASHING IN DRY	ISO 105 D01 > 3 - 4
TREATMENT WATER REPELLENT	WR
RISERS MAKING	
NAME	COATS BONDED C.F.P.
Nº OF REFERENCE	V138
MATERIAL	POLYESTER
TYPE OF FINISH	SILK
BREAKING STRENGTH	9,5 kg
ELONGATION	19%

RISERS TECHNICAL DATA

RISERS	
Nº OF REFERENCE	3455
MATERIAL	POLYESTER & TECHNORA
WIDTH	12 m/m
THICKNESS	0,9 m/m
BREAKING STRENGTH	1.078 DAN
ELONGATION	MAX. 11%
WEIGHT	9,1 G* L.M.
COLOUR	BLACK
COLOR INDICATOR	
Nº OF REFERENCE	IC-G 1-2
MATERIAL	POLYESTER
WIDTH	70 m/m
THICKNESS	0,80 m/m
BREAKING STRENGTH	130 DN
ELONGATION	35 %
WEIGHT	32 G * L.M.
COLOUR	GREEN
LOOPS	
Nº OF REFERENCE	LKI - 10
MATERIAL	NYLON
WIDTH	10 m/m
BREAKING STRENGTH	84 kg
ELONGATION	30 %
WEIGHT	5,5 G/M
COLOUR	WHITE

NIVIUK