PEAK 5

Technical specifications

TECHNICAL DATA

PEAK 5			**21**	**22**	**24**	**26**
CELLS	NUMBER		85	85	85	85
ASPECT RATIO	FLAT		6,95	6,95	6,95	6,95
AREA	FLAT	m2	20,5	22	23,5	25,5
	PROJECTED	m2	17,53	18,81	20,1	21,8
SPAN	FLAT	m	11,94	12,37	12,78	13,31
CORD	MAXIMUM	m	2,16	2,23	2,31	2,41
LINES	TOTAL	m	187	193	200	211
	MAIN		2/1/3	2/1/3	2/1/3	2/1/3
RISERS	NUMBER	2+1	A/A'/B	A/A'/B	A/A'/B	A/A'/B
	ACCELERATOR	mm	130	140	140	140
TOTAL WEIGHT IN FLIGHT	MIN-MAX	kg	70-85	80-98	92-110	105-125
GLIDER WEIGHT		kg	5	5,3	5,5	5,8
CERTIFICATION	EN/LTF		D	D	D	D

MATERIALS TECHNICAL DATA

CANOPY	FABRIC CODE	SUPPLIER
UPPER SURFACE	30 DMF / N20 DMF	DOMINICO TEX CO (KOREA)
BOTTOM SURFACE	2044 32 PS	DOMINICO TEX CO (KOREA)
PROFILES	30 DFM / 2044 32 FM	DOMINICO TEX CO (KOREA)
DIAGONALS	30 DFM / 2044 32 FM	DOMINICO TEX CO (KOREA)
LOOPS	LKI - 10	KOLON IND. (KOREA)
REIFORCEMENT LOOPS	W-420 / RIPSTOP	D-P (GERMANY)
TRAILING EDGE REIFORCEMENT	MYLAR	D-P (GERMANY)
RIBS REIFORCEMNET	LTN-0.8 STICK	SPORTWARE CO.CHINA
THREAD	SERAFIL 60	AMAN (GERMANY)

SUSPENSION LINES	FABRIC CODE	SUPPLIER
UPPER CASCADES	DC - 60	LIROS GMHB (GERMANY)
UPPER CASCADES	DC - 40	LIROS GMHB (GERMANY)
UPPER CASCADES	DC - 35	LIROS GMHB (GERMANY)
UPPER CASCADES	A-8000/U 50	EDELRID (GERMANY)
UPPER CASCADES	A-8000/U 70	EDELRID (GERMANY)
MIDDLE CASCADES	DC - 35	LIROS GMHB (GERMANY)
MIDDLE CASCADES	A-8000/U 50	EDELRID (GERMANY)
MIDDLE CASCADES	A-8000/U 70	EDELRID (GERMANY)
MIDDLE CASCADES	A-8000/U 90	EDELRID (GERMANY)
MIDDLE CASCADES	A-8000/U 190	EDELRID (GERMANY)
MAIN	A-8000/U 70	EDELRID (GERMANY)
MAIN	A-8000/U 130	EDELRID (GERMANY)
MAIN	A-8000/U 190	EDELRID (GERMANY)
MAIN	A-8000/U 360	EDELRID (GERMANY)
MAIN BREAK	TNL - 280	TEIJIM LIMITED (JAPAN)
THREAD	SERAFIL 60	AMAN (GERMANY)

RISERS	FABRIC CODE	SUPPLIER
MATERIAL	3455	COUSIN (FRANCE)
COLOR INDICATOR	210D	TECNI SANGLES (FRANCE)
THREAD	V138	COATS (ENGLAND)
MAILLONS	3.5	ANSUNG PRECISION (KOREA)
PULLEYS	RF25109	RONSTAN (AUSTRALIA)

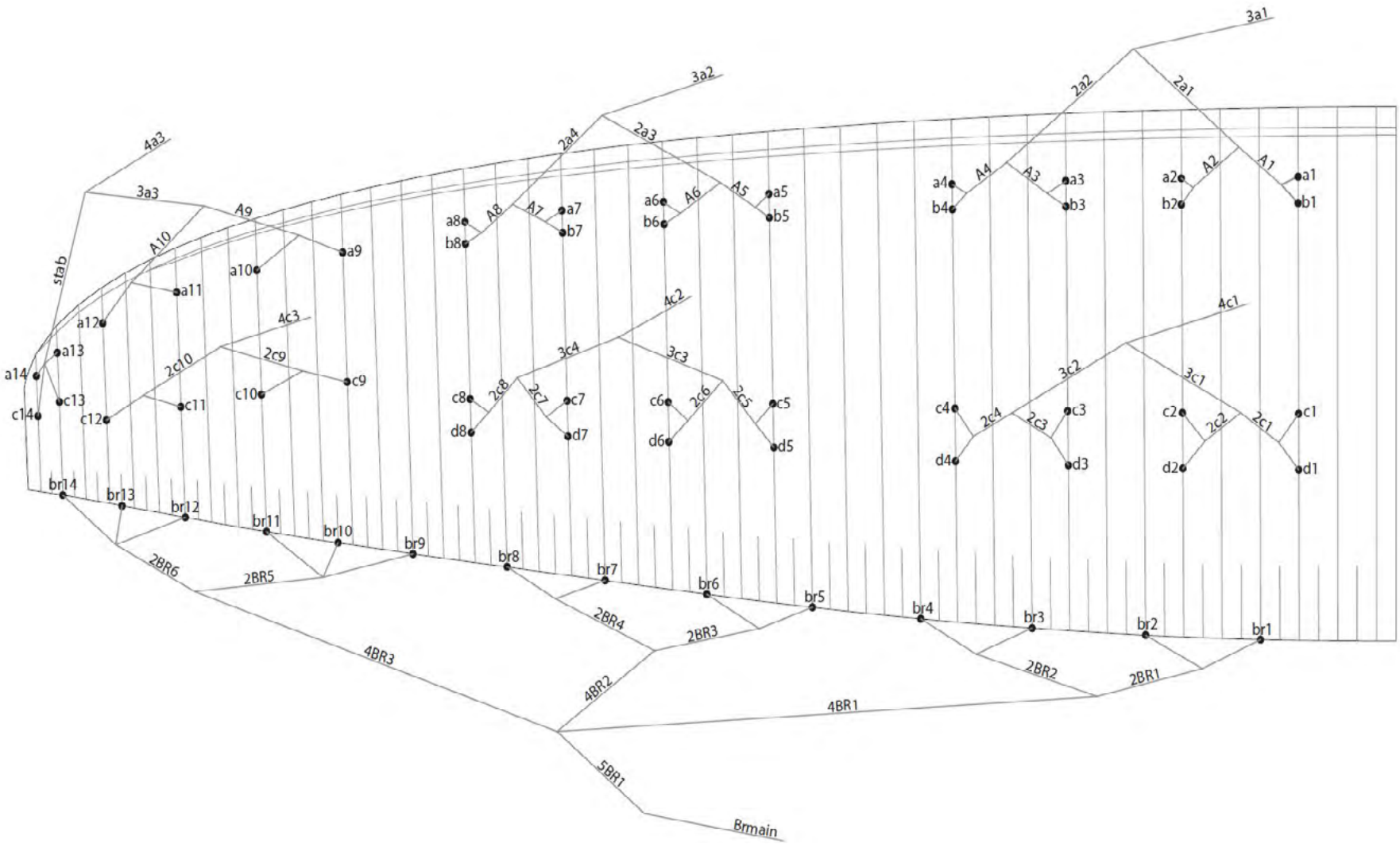
3a1
3a2
2a1
2a2
2a3
2a4
4a3
3a3
A9
A10
stab
A1
A2
A3
A4
A5
A6
A7
A8
a1
b1
a2
b2
a3
b3
a4
b4
a5
b5
a6
b6
a7
b7
a8
b8
a9
a10
a11
a12
a13
a14
c13
c14
c12
c11
c10
c9
c8
c7
c6
c5
c4
c3
c2
c1
d1
d2
d3
d4
d5
d6
d7
d8
4c1
4c2
4c3
3c1
3c2
3c3
3c4
2c1
2c2
2c3
2c4
2c5
2c6
2c7
2c8
2c9
2c10
br1
br2
br3
br4
br5
br6
br7
br8
br9
br10
br11
br12
br13
br14
2BR1
2BR2
2BR3
2BR4
2BR5
2BR6
4BR1
4BR2
4BR3
5BR1
Brmain

RISERS PLAN

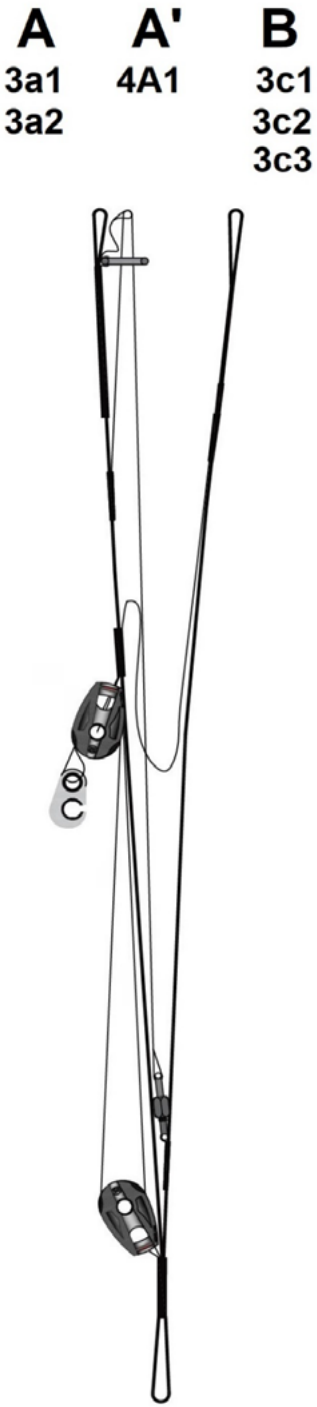

COLORS TECHNICAL DATA

SONIC	SB1	ROYAL BLUE	TOP	REF: 317
	SB2	WHITE	BOTTOM - ALL WHITE	REF: 001
	SB3	BLACK	HORN	REF: 102
	SB4	LIMA	SHADOW	REF: 500
	SB5	WHITE	VOLUME SHADOW	REF: 001

JET	SB1	PURPLE	TOP	REF: 240
	SB2	WHITE	BOTTOM - ALL WHITE	REF: 001
	SB3	BLACK	HORN	REF: 102
	SB4	WHITE	SHADOW	REF: 001
	SB5	GOLD	VOLUME SHADOW	REF: 939

PHOENIX	SB1	ORANGE	TOP	REF: 744
	SB2	WHITE	BOTTOM - ALL WHITE	REF: 001
	SB3	BLACK	HORN	REF: 102
	SB4	WHITE	SHADOW	REF: 001
	SB5	DRAGON RED	VOLUME SHADOW	REF: 636

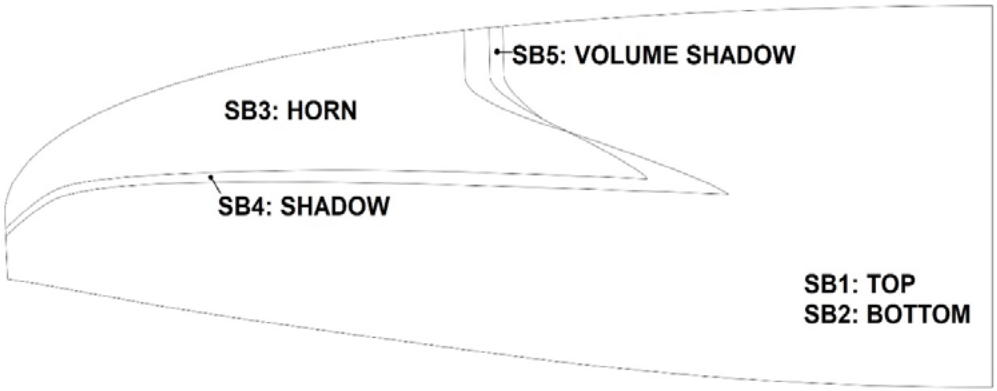

PEAK 5

21			22			24			26		
P.T.V.		**kg/m2**	**P.T.V.**		**kg/m2**	**P.T.V.**		**kg/m2**	**P.T.V.**		**kg/m2**
70	=	3,41	80	=	3,64	92	=	3,91	105	=	4,04
71	=	3,46	81	=	3,68	93	=	3,96	106	=	4,08
72	=	3,51	82	=	3,73	94	=	4,00	107	=	4,12
73	=	3,56	83	=	3,77	95	=	4,04	108	=	4,15
74	=	3,61	84	=	3,82	96	=	4,09	109	=	4,19
75	=	3,66	85	=	3,86	97	=	4,13	110	=	4,23
76	=	3,71	86	=	3,91	98	=	4,17	111	=	4,27
77	=	3,76	87	=	3,95	99	=	4,21	112	=	4,31
78	=	3,80	88	=	4,00	100	=	4,26	113	=	4,35
79	=	3,85	89	=	4,05	101	=	4,30	114	=	4,38
80	=	3,90	90	=	4,09	102	=	4,34	115	=	4,42
81	=	3,95	91	=	4,14	103	=	4,38	116	=	4,46
82	=	4,00	92	=	4,18	104	=	4,43	117	=	4,50
83	=	4,05	93	=	4,23	105	=	4,47	118	=	4,54
84	=	4,10	94	=	4,27	106	=	4,51	119	=	4,58
85	=	4,15	95	=	4,32	107	=	4,55	120	=	4,62
			96	=	4,36	108	=	4,60	121	=	4,65
			97	=	4,41	109	=	4,64	122	=	4,69
			98	=	4,45	110	=	4,68	123	=	4,73
									124	=	4,77
									125	=	4,81

PEAK 5 **21**

REF.	MAT.	KG	COLOUR	MM	REF.	MAT.	KG	COLOUR	MM	REF.	MAT.	KG	COLOUR	MM	REF.	MAT.	KG	COLOUR	MM	REF.	MAT.	KG	COLOUR	MM
a1	8000/U	70	NATURAL	247	b1	8000/U	50	NATURAL	210	c1	8000/U	50	NATURAL	454	d1	DC	35	WHT	540	br1	DC	35	WHT	775
a2	8000/U	70	NATURAL	243	b2	8000/U	50	NATURAL	203	c2	8000/U	50	NATURAL	447	d2	DC	35	WHT	533	br2	DC	35	WHT	514
a3	8000/U	70	NATURAL	239	b3	8000/U	50	NATURAL	199	c3	8000/U	50	NATURAL	438	d3	DC	35	WHT	523	br3	DC	35	WHT	682
a4	8000/U	70	NATURAL	233	b4	8000/U	50	NATURAL	197	c4	8000/U	50	NATURAL	433	d4	DC	35	WHT	511	br4	DC	35	WHT	730
a5	8000/U	70	NATURAL	226	b5	8000/U	50	NATURAL	191	c5	8000/U	50	NATURAL	353	d5	DC	35	WHT	420	br5	DC	35	WHT	715
a6	8000/U	70	NATURAL	222	b6	8000/U	50	NATURAL	189	c6	8000/U	50	NATURAL	320	d6	DC	35	WHT	382	br6	DC	35	WHT	524
a7	8000/U	70	NATURAL	224	b7	8000/U	50	NATURAL	192	c7	8000/U	50	NATURAL	290	d7	DC	35	WHT	348	br7	DC	35	WHT	597
a8	8000/U	70	NATURAL	220	b8	8000/U	50	NATURAL	192	c8	8000/U	50	NATURAL	274	d8	DC	35	WHT	326	br8	DC	35	WHT	651
a9	DC	60	WHT	922						c9	DC	40	WHT	686						br9	DC	35	WHT	987
a10	DC	40	WHT	799						c10	DC	35	WHT	563						br10	DC	35	WHT	879
a11	DC	35	WHT	794						c11	DC	35	WHT	558						br11	DC	35	WHT	861
a12	DC	35	WHT	796						c12	DC	35	WHT	610						br12	DC	35	WHT	738
a13	DC	35	WHT	511						c13	DC	35	WHT	520						br13	DC	35	WHT	766
a14	DC	35	WHT	499						c14	DC	35	WHT	530						br14	DC	35	WHT	849
A1	8000/U	90	NATURAL	1007						2C1	8000/U	50	NATURAL	537						2BR1	DC	35	WHT	804
A2	8000/U	90	NATURAL	918						2C2	8000/U	50	NATURAL	432						2BR2	DC	35	WHT	529
A3	8000/U	90	Natural	925						2C3	8000/U	50	NATURAL	444						2BR3	DC	35	WHT	716
A4	8000/U	90	NATURAL	960						2C4	8000/U	50	NATURAL	507						2BR4	DC	35	WHT	560
A5	8000/U	90	NATURAL	910						2C5	8000/U	50	NATURAL	532						2BR5	DC	35	WHT	633
A6	8000/U	90	NATURAL	782						2C6	8000/U	50	NATURAL	438						2BR6	DC	35	WHT	733
A7	8000/U	90	NATURAL	778						2C7	8000/U	50	NATURAL	467										
A8	8000/U	90	NATURAL	762						2C8	8000/U	50	NATURAL	511										
A9	8000/U	70	NATURAL	849						2C9	8000/U	50	NATURAL	604										
A10	8000/U	70	NATURAL	777						2C10	8000/U	50	NATURAL	556										
2A1	8000/U	190	NATURAL	1147						3C1	8000/U	90	NATURAL	909						4BR1	8000/U	50	NATURAL	3240
2A2	8000/U	190	NATURAL	1119						3C2	8000/U	90	NATURAL	883						4BR2	8000/U	70	NATURAL	2880
2A3	8000/U	190	NATURAL	1014						3C3	8000/U	90	NATURAL	801						4BR3	8000/U	50	NATURAL	2340
2A4	8000/U	190	NATURAL	941						3C4	8000/U	90	NATURAL	743						5BR1	8000/U	190	NATURAL	1385
3A3	8000/U	90	NATURAL	1804																				
STAB	8000/U	50	NATURAL	2774																				
3A1	8000/U	360	NATURAL	4334						4C1	8000/U	190	NATURAL	4829						BRMAIN	TNL	280	RED	1500
3A2	8000/U	360	NATURAL	4402						4C2	8000/U	190	NATURAL	4844								KNOT POINT:		1300
4A3	8000/U	130	NATURAL	2571						4C3	8000/U	70	NATURAL	4874										

PEAK 5					22																			
REF.	MAT.	kg	COLOUR	mm	REF.	MAT.	kg	COLOUR	mm	REF.	MAT.	kg	COLOUR	mm	REF.	MAT.	kg	COLOUR	mm	ref.	mat.	kg	COLOUR	mm
a1	8000/U	70	NATURAL	257	b1	8000/U	50	NATURAL	222	c1	8000/U	50	NATURAL	471	d1	DC	35	WHT	564	br1	DC	35	WHT	803
a2	8000/U	70	NATURAL	253	b2	8000/U	50	NATURAL	215	c2	8000/U	50	NATURAL	463	d2	DC	35	WHT	557	br2	DC	35	WHT	535
a3	8000/U	70	NATURAL	248	b3	8000/U	50	NATURAL	210	c3	8000/U	50	NATURAL	454	d3	DC	35	WHT	547	br3	DC	35	WHT	705
a4	8000/U	70	NATURAL	242	b4	8000/U	50	NATURAL	208	c4	8000/U	50	NATURAL	449	d4	DC	35	WHT	534	br4	DC	35	WHT	757
a5	8000/U	70	NATURAL	235	b5	8000/U	50	NATURAL	194	c5	8000/U	50	NATURAL	365	d5	DC	35	WHT	440	br5	DC	35	WHT	741
a6	8000/U	70	NATURAL	231	b6	8000/U	50	NATURAL	190	c6	8000/U	50	NATURAL	332	d6	DC	35	WHT	401	br6	DC	35	WHT	545
a7	8000/U	70	NATURAL	233	b7	8000/U	50	NATURAL	192	c7	8000/U	50	NATURAL	301	d7	DC	35	WHT	365	br7	DC	35	WHT	617
a8	8000/U	70	NATURAL	229	b8	8000/U	50	NATURAL	192	c8	8000/U	50	NATURAL	284	d8	DC	35	WHT	342	br8	DC	35	WHT	676
a9	DC	60	WHT	955						c9	DC	40	WHT	711						br9	DC	35	WHT	1022
a10	DC	40	WHT	827						c10	DC	35	WHT	584						br10	DC	35	WHT	912
a11	DC	35	WHT	822						c11	DC	35	WHT	578						br11	DC	35	WHT	894
a12	DC	35	WHT	822						c12	DC	35	WHT	632						br12	DC	35	WHT	762
a13	DC	35	WHT	529						c13	DC	35	WHT	539						br13	DC	35	WHT	792
a14	DC	35	WHT	517						c14	DC	35	WHT	549						br14	DC	35	WHT	880
A1	8000/U	90	NATURAL	1042						2C1	8000/U	50	NATURAL	555						2BR1	DC	35	WHT	830
A2	8000/U	90	NATURAL	952						2C2	8000/U	50	NATURAL	448						2BR2	DC	35	WHT	550
A3	8000/U	90	Natural	959						2C3	8000/U	50	NATURAL	460						2BR3	DC	35	WHT	739
A4	8000/U	90	NATURAL	997						2C4	8000/U	50	NATURAL	526						2BR4	DC	35	WHT	584
A5	8000/U	90	NATURAL	939						2C5	8000/U	50	NATURAL	551						2BR5	DC	35	WHT	653
A6	8000/U	90	NATURAL	811						2C6	8000/U	50	NATURAL	454						2BR6	DC	35	WHT	763
A7	8000/U	90	NATURAL	808						2C7	8000/U	50	NATURAL	484										
A8	8000/U	90	NATURAL	792						2C8	8000/U	50	NATURAL	529										
A9	8000/U	70	NATURAL	879						2C9	8000/U	50	NATURAL	626										
A10	8000/U	70	NATURAL	804						2C10	8000/U	50	NATURAL	576										
2A1	8000/U	190	NATURAL	1194						3C1	8000/U	90	NATURAL	941						4BR1	8000/U	50	NATURAL	3351
2A2	8000/U	190	NATURAL	1166						3C2	8000/U	90	NATURAL	915						4BR2	8000/U	50	NATURAL	2986
2A3	8000/U	190	NATURAL	1056						3C3	8000/U	90	NATURAL	829						4BR3	8000/U	50	NATURAL	2437
2A4	8000/U	190	NATURAL	981						3C4	8000/U	90	NATURAL	770						5BR1	8000/U	90	NATURAL	1533
3A3	8000/U	90	NATURAL	1869																				
STAB	8000/U	50	NATURAL	2870																				
3A1	8000/U	360	NATURAL	4497						4C1	8000/U	190	NATURAL	5021						BRMAIN	TNL	280	RED	1500
3A2	8000/U	360	NATURAL	4572						4C2	8000/U	190	NATURAL	5039									KNOT POINT:	1300
4A3	8000/U	130	NATURAL	2687						4C3	8000/U	70	NATURAL	5071										

LINES TECHNICAL DATA

PEAK 5 **24**

REF.	MAT.	kg	COLOUR	mm	REF.	MAT.	kg	COLOUR	mm	REF.	MAT.	kg	COLOUR	mm	REF.	MAT.	kg	COLOUR	mm	ref.	mat.	kg	COLOUR	mm
a1	8000/U	70	NATURAL	265	b1	8000/U	50	NATURAL	227	c1	8000/U	50	NATURAL	486	d1	DC	35	WHT	583	br1	DC	35	WHT	830
a2	8000/U	70	NATURAL	261	b2	8000/U	50	NATURAL	219	c2	8000/U	50	NATURAL	478	d2	DC	35	WHT	576	br2	DC	35	WHT	553
a3	8000/U	70	NATURAL	256	b3	8000/U	50	NATURAL	215	c3	8000/U	50	NATURAL	469	d3	DC	35	WHT	565	br3	DC	35	WHT	728
a4	8000/U	70	NATURAL	250	b4	8000/U	50	NATURAL	213	c4	8000/U	50	NATURAL	464	d4	DC	35	WHT	552	br4	DC	35	WHT	783
a5	8000/U	70	NATURAL	246	b5	8000/U	50	NATURAL	211	c5	8000/U	50	NATURAL	377	d5	DC	35	WHT	454	br5	DC	35	WHT	766
a6	8000/U	70	NATURAL	243	b6	8000/U	50	NATURAL	208	c6	8000/U	50	NATURAL	343	d6	DC	35	WHT	414	br6	DC	35	WHT	564
a7	8000/U	70	NATURAL	245	b7	8000/U	50	NATURAL	211	c7	8000/U	50	NATURAL	311	d7	DC	35	WHT	377	br7	DC	35	WHT	637
a8	8000/U	70	NATURAL	241	b8	8000/U	50	NATURAL	211	c8	8000/U	50	NATURAL	294	d8	DC	35	WHT	353	br8	DC	35	WHT	698
a9	DC	60	WHT	987						c9	DC	40	WHT	735						br9	DC	35	WHT	1056
a10	DC	40	WHT	856						c10	DC	35	WHT	603						br10	DC	35	WHT	943
a11	DC	35	WHT	850						c11	DC	35	WHT	598						br11	DC	35	WHT	924
a12	DC	35	WHT	852						c12	DC	35	WHT	653						br12	DC	35	WHT	787
a13	DC	35	WHT	547						c13	DC	35	WHT	557						br13	DC	35	WHT	819
a14	DC	35	WHT	534						c14	DC	35	WHT	567						br14	DC	35	WHT	910
A1	8000/U	90	NATURAL	1077						2C1	8000/U	50	NATURAL	573						2BR1	DC	35	WHT	857
A2	8000/U	90	NATURAL	983						2C2	8000/U	50	NATURAL	463						2BR2	DC	35	WHT	570
A3	8000/U	90	Natural	991						2C3	8000/U	50	NATURAL	476						2BR3	DC	35	WHT	763
A4	8000/U	90	NATURAL	1030						2C4	8000/U	50	NATURAL	545						2BR4	DC	35	WHT	605
A5	8000/U	90	NATURAL	968						2C5	8000/U	50	NATURAL	569						2BR5	DC	35	WHT	675
A6	8000/U	90	NATURAL	833						2C6	8000/U	50	NATURAL	469						2BR6	DC	35	WHT	790
A7	8000/U	90	NATURAL	829						2C7	8000/U	50	NATURAL	500										
A8	8000/U	90	NATURAL	812						2C8	8000/U	50	NATURAL	548										
A9	8000/U	70	NATURAL	908						2C9	8000/U	50	NATURAL	647										
A10	8000/U	70	NATURAL	832						2C10	8000/U	50	NATURAL	595										
2A1	8000/U	190	NATURAL	1230						3C1	8000/U	90	NATURAL	972						4BR1	8000/U	50	NATURAL	3462
2A2	8000/U	190	NATURAL	1202						3C2	8000/U	90	NATURAL	946						4BR2	8000/U	50	NATURAL	3087
2A3	8000/U	190	NATURAL	1087						3C3	8000/U	90	NATURAL	857						4BR3	8000/U	50	NATURAL	2521
2A4	8000/U	190	NATURAL	1009						3C4	8000/U	90	NATURAL	796						5BR1	8000/U	90	NATURAL	1544
3A3	8000/U	90	NATURAL	1932																				
STAB	8000/U	50	NATURAL	2970																				
3A1	8000/U	360	NATURAL	4673						4C1	8000/U	190	NATURAL	5206						BRMAIN	TNL	280	RED	1575
3A2	8000/U	360	NATURAL	4754						4C2	8000/U	190	NATURAL	5228									KNOT POINT:	1375
4A3	8000/U	130	NATURAL	2796						4C3	8000/U	70	NATURAL	5262										

PEAK 5					26																			
REF.	MAT.	kg	COLOUR	mm	REF.	MAT.	kg	COLOUR	mm	REF.	MAT.	kg	COLOUR	mm	REF.	MAT.	kg	COLOUR	mm	ref.	mat.	kg	COLOUR	mm
a1	8000/U	70	NATURAL	276	b1	8000/U	70	NATURAL	237	c1	8000/U	70	NATURAL	506	d1	DC	35	WHT	601	br1	DC	35	WHT	864
a2	8000/U	70	NATURAL	272	b2	8000/U	70	NATURAL	230	c2	8000/U	70	NATURAL	498	d2	DC	35	WHT	594	br2	DC	35	WHT	575
a3	8000/U	70	NATURAL	267	b3	8000/U	70	NATURAL	225	c3	8000/U	70	NATURAL	489	d3	DC	35	WHT	583	br3	DC	35	WHT	759
a4	8000/U	70	NATURAL	260	b4	8000/U	70	NATURAL	223	c4	8000/U	70	NATURAL	483	d4	DC	35	WHT	570	br4	DC	35	WHT	815
a5	8000/U	70	NATURAL	252	b5	8000/U	70	NATURAL	215	c5	8000/U	70	NATURAL	393	d5	DC	35	WHT	468	br5	DC	35	WHT	798
a6	8000/U	70	NATURAL	248	b6	8000/U	70	NATURAL	212	c6	8000/U	70	NATURAL	357	d6	DC	35	WHT	426	br6	DC	35	WHT	586
a7	8000/U	70	NATURAL	250	b7	8000/U	70	NATURAL	215	c7	8000/U	70	NATURAL	324	d7	DC	35	WHT	387	br7	DC	35	WHT	665
a8	8000/U	70	NATURAL	246	b8	8000/U	70	NATURAL	215	c8	8000/U	70	NATURAL	306	d8	DC	35	WHT	363	br8	DC	35	WHT	727
a9	DC	60	WHT	1028						c9	DC	40	WHT	765						br9	DC	35	WHT	1101
a10	DC	40	WHT	891						c10	DC	40	WHT	628						br10	DC	35	WHT	982
a11	DC	35	WHT	885						c11	DC	40	WHT	623						br11	DC	35	WHT	962
a12	DC	35	WHT	887						c12	DC	40	WHT	680						br12	DC	35	WHT	821
a13	DC	35	WHT	570						c13	DC	40	WHT	580						br13	DC	35	WHT	853
a14	DC	35	WHT	557						c14	DC	40	WHT	591						br14	DC	35	WHT	948
A1	8000/U	130	NATURAL	1121						2c1	8000/U	90	NATURAL	596						2BR1	DC	35	WHT	894
A2	8000/U	130	NATURAL	1024						2c2	8000/U	90	NATURAL	483						2BR2	DC	35	WHT	592
A3	8000/U	130	NATURAL	1032						2c3	8000/U	90	NATURAL	496						2BR3	DC	35	WHT	796
A4	8000/U	130	NATURAL	1075						2c4	8000/U	90	NATURAL	569						2BR4	DC	35	WHT	628
A5	8000/U	90	NATURAL	1012						2c5	8000/U	90	NATURAL	592						2BR5	DC	35	WHT	704
A6	8000/U	90	NATURAL	873						2c6	8000/U	90	NATURAL	489						2BR6	DC	35	WHT	821
A7	8000/U	90	NATURAL	869						2c7	8000/U	90	NATURAL	521										
A8	8000/U	90	NATURAL	852						2c8	8000/U	90	NATURAL	571										
A9	8000/U	70	NATURAL	946						2c9	8000/U	50	NATURAL	674										
A10	8000/U	70	NATURAL	866						2c10	8000/U	50	NATURAL	620										
2a1	8000/U	230	NATURAL	1282						3c1	8000/U	130	NATURAL	1012						4BR1	8000/U	50	NATURAL	3609
2a2	8000/U	230	NATURAL	1254						3c2	8000/U	130	NATURAL	986						4BR2	8000/U	70	NATURAL	3214
2a3	8000/U	190	NATURAL	1133						3c3	8000/U	130	NATURAL	893						4BR3	8000/U	50	NATURAL	2621
2a4	8000/U	190	NATURAL	1052						3c4	8000/U	130	NATURAL	829						5BR1	8000/U	190	NATURAL	1763
3a3	8000/U	130	NATURAL	2012																				
stab	8000/U	90	NATURAL	3093																				
3A1	8000/U	470	NATURAL	4887						4c1	8000/U	230	NATURAL	5444						BRMAIN	TNL	280	RED	1500
3A2	8000/U	360	NATURAL	4976						4c2	8000/U	230	NATURAL	5471									KNOT POINT:	1300
4A3	8000/U	190	NATURAL	2942						4c3	8000/U	70	NATURAL	5510										

NIVIUK PEAK 5 21

LINES HEIGHT mm

	A	B	C	D	BR
1	7238	7203	7223	7309	7562
2	7145	7107	7111	7197	7301
3	7120	7082	7088	7173	7194
4	7149	7115	7146	7224	7242
5	7055	7022	7024	7091	7054
6	6923	6892	6897	6959	6863
7	6848	6818	6838	6896	6780
8	6828	6802	6866	6918	6834
9	6658		6674		6702
10	6535		6551		6594
11	6458		6498		6576
12	6460		6550		6553
13	6370		6378		6581
14	6358		6388		6664

RISERS LENGHT mm

	A	A'	B	
	500	500	500	STANDARD
	365	420	500	ACCELERATED

NIVIUK PEAK 5 22

LINES HEIGHT mm

	A	B	C	D	BR
1	7496	7461	7482	7575	7801
2	7402	7364	7367	7461	7533
3	7376	7338	7344	7437	7423
4	7408	7374	7405	7490	7475
5	7308	7267	7278	7353	7283
6	7176	7135	7148	7217	7087
7	7100	7059	7088	7152	7004
8	7080	7043	7116	7174	7063
9	6895		6902		6929
10	6767		6775		6819
11	6687		6719		6801
12	6687		6773		6779
13	6591		6602		6809
14	6579		6612		6897

RISERS LENGHT mm

	A	A'	B	
	500	500	500	STANDARD
	360	405	500	ACCELERATED

NIVIUK PEAK 5 24

LINES HEIGHT mm

	A	B	C	D	BR
1	7747	7709	7730	7827	8056
2	7649	7607	7612	7710	7779
3	7624	7583	7590	7686	7667
4	7657	7620	7654	7742	7722
5	7557	7522	7524	7601	7523
6	7419	7384	7390	7461	7321
7	7339	7305	7328	7394	7236
8	7318	7288	7359	7418	7297
9	7137		7149		7158
10	7006		7017		7045
11	6924		6960		7026
12	6926		7015		7004
13	6827		6837		7036
14	6814		6847		7127

RISERS LENGHT mm

	A	A'	B	
	500	500	500	STANDARD
	360	405	500	ACCELERATED

NIVIUK PEAK 5 26

LINES HEIGHT mm

	A	B	C	D	BR
1	8067	8030	8052	8147	8490
2	7966	7926	7931	8027	8201
3	7941	7901	7909	8003	8083
4	7977	7942	7976	8063	8139
5	7874	7839	7843	7918	7931
6	7731	7697	7704	7773	7719
7	7648	7615	7639	7702	7630
8	7627	7598	7671	7728	7692
9	7437		7457		7549
10	7301		7319		7430
11	7216		7260		7410
12	7218		7317		7386
13	7121		7130		7418
14	7108		7141		7513

RISERS LENGHT mm

	A	A'	B	
	500	500	500	STANDARD
	360	405	500	ACCELERATED

PEAK 5

MATERIAL CODE		DC	DC	DC	A-8000/U	A-8000/U	A-8000/U	A-8000/U	A-8000/U	A-8000/U	A-8000/U	TNL
STRENGTH CODE		35	40	60	050	070	90	130	190	360	470	280
DIAMETER mm	Ø	0,38	0,5	0,6	0,5	0,7	0,8	0,9	1,1	1,4 X 1,9	1,6 X 2,2	1,8
CORE MATERIAL		DYNEEMA	DYNEEMA	DYNEEMA	ARAMID	ARAMID	ARAMID	ARAMID	ARAMID	ARAMID	ARAMID	TECHNORA
SLEEVE MATERIAL		NO	NO	NO	NO	NO	NO	NO	NO	NO	NO	POLYESTER
WEIGHT G/M	TOTAL	0,11	0,19	0,24	0,3	0,4	0,5	0,8	1,1	2,1	2,8	2,7
BREAKING STRENGTH	MINIMUM	35	40	60	50	70	90	130	190	360	470	280
	MAXIMUM	38	48	84	59	78	110	144	211	380	-	320
STRENGTH AFTER												
5.000 BENDING	TEST EN	33	33	74	26	39	49	88	52	196,6	-	134,7
CYCLES												
ELONGATION AT	5 DAN EN %				0,4	0,5	0,4	0,4	0,4	0,2	0,5	0,2
	10 DAN EN %	0,77		0,43	0,7	0,7	0,6	0,6	0,6	0,3	0,6	0,3
	15 DAN EN %				1,1	1	0,8	0,8	0,7	0,4	0,7	0,4
	20 DAN EN %				1,5	1,3	1	0,9	0,9	0,5	0,8	0,4
	25 DAN EN %				1,9	1,5	1,3	1	1	0,6	0,9	0,5
	30 DAN EN %			1,2	3,3	2,8	2,3	1,8	1,6		1,2	0,9
	75 DAN EN %					3,7	3,2	3,1	2,7	1,5	1,6	1,3
	100 DAN EN %								2,6	1,9	1,9	1,7
	125 DAN EN %								3,5		2,3	2
	150 DAN EN %								4,3	2,6	2,7	2,3
	175 DAN EN %										3,1	2,7
	200 DAN EN %									3,1	3,2	2,8
ELONGATION MAX. BREAKING STRENGTH %				3,2	3,8	3,9	4,3	4	4,4		5	4,1

MAILLON TECHNICAL DATA

DESCRIPTION

	MAILLON	DELTA
	CODE	3.5
	MATERIAL	STAINLESS STEEL
	SIZE	3 m/m
	WEIGHT	5 G/PIECE
	QUANTITY	6 PIECES
	INSERTS	2 GREEN / 4 BLACK

TECHNICAL SPECIFICATIONS

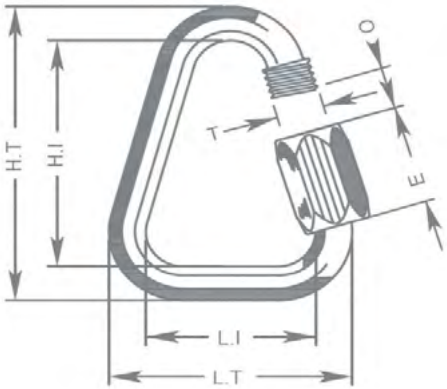

DIMENSIONS	mm
L.T.	22
L.I.	14
H.T.	37
H.I.	29
O	5
E	12
T	4
LOAD	KG
WORKING LIMIT	110
BREAKING	550

MATERIAL

AISI 304 STAINLESS STEEL STANDARD

CLOSING APPLIED BY MANUAL & ENTIRE SCREWING OF THE NUT

TO GUARANTEE THE HIGHEST SAFETY (NO THREAD SHOULD BE OBVIOUS)

SYSTEMATIC CONTROL OF MAILLON QUICK-LINKS BEFORE EVERY FLIGHT

PULLEY TECHNICAL DATA

DESCRIPTION

	PULLEY	20 m/m
	CODE	RF25109
	MATERIAL	STAINLESS STEEL
		NYLON
		CARBON ACETAL
	BEARING	DELRIN®
	WEIGHT	9 G/PIECE

TECHNICAL SPECIFICATIONS

	DIMENSIONS	mm
	L.T.	20
	L.I.	20
	H.T.	32
	Ø	6 MAX
	LOAD	KG
	WORKING LIMIT	250
	BREAKING	550

THREAD TECHNICAL DATA

SAIL MAKING	
NAME	SERAFIL
Nº OF REFERENCE	60
MATERIAL	POLYESTER
TYPE OF FINISH	SILK
LINEAR DENSITY	NM 61 / 3 (DTEX 163 * 3)
BREAKING STRENGTH	3,000 CN
ELONGATION	17,00%
SERAFIL PROPERTIES	
SOLIDITY ARTIFICIAL LIGTH	ISO 105 B02 > 5 - 6
SOLIDITY SWEAT	ISO 105 E04 > 4
SOLIDITY WASHING	ISO 105 C04 > 3
SOLIDITY GRAZE IN DRY	ISO 105 X12 > 4
SOLIDITY WASHING IN DRY	ISO 105 D01 > 3 - 4
TREATMENT WATER REPELLENT	WR
RISERS MAKING	
NAME	COATS BONDED C.F.P.
Nº OF REFERENCE	V138
MATERIAL	POLYESTER
TYPE OF FINISH	SILK
BREAKING STRENGTH	9,5 KG
ELONGATION	19%

RISERS TECHNICAL DATA

RISERS	
Nº OF REFERENCE	3455
MATERIAL	POLYESTER & TECHNORA
WIDTH	12 mm
THICKNESS	2,25 mm
BREAKING STRENGTH	1.100 DAN
ELONGATION	MAX. 11%
WEIGTH	21,1 G/M
COLOR	BLACK
COLOR INDICATOR	
Nº OF REFERENCE	IC-G 1-2
MATERIAL	POLYESTER
WIDTH	70 Mm
THICKNESS	0,80 Mm
BREAKING STRENGTH	130 DN
ELONGATION	35 %
WEIGTH	32 G * L.M.
COLOR	GREEN
LOOPS	
Nº OF REFERENCE	LKI - 10
MATERIAL	NYLON
WIDTH	10 Mm
BREAKING STRENGTH	84 KG
ELONGATION	30 %
WEIGTH	5,5 G/M
COLOR	WHITE

Amazing Adventures
niviuk.com
NIVIUK